Thermal management strategies for integrated hybrid vehicle subsystems

Alessandro Picarelli – Claytex Services Ltd.
alessandro.picarelli@claytex.com

Simon Robinson – Jaguar Land Rover
srobin43@jaguarlandrover.com

HEVC 2016

Copyright © Claytex Services Limited 2016

Agenda

1. Project motivation and objectives
2. Description of Heat pump concept & integration within vehicle model
3. Cabin and battery warm up scenarios
4. Cabin and battery warm up scenarios selected to consider for future work
5. Recirculation strategies and cabin exhaust heat recovery
6. Conclusions
7. Future work

Copyright © Claytex Services Limited 2016

Project Motivation and Objectives

Motivation:

- Optimising a BEV (Battery Electric Vehicle) thermal management strategy, with particular focus on battery and cabin heating in cold climates, to improve the vehicle driving range

Objectives:

- Transfer and redistribute thermal energy throughout the vehicle subsystems to maximise the overall vehicle efficiency in hot and cold climates
- Minimise use of PTC (Positive Thermal Coefficient) heaters
- Integration of a dual condenser heat pump within a BEV architecture
- Analysis of heat pump-to-subsystem interaction scenarios

CLAYTEX

Copyright © Claytex Services Limited 2016

Heat Pump concept used

Two-condenser heat pump circuit

- Provides heat exchange fluid at an optimal temperature to suit the subsystem being heated/cooled via 3 loops:
  - hot (e.g. initial battery and cabin warmup)
  - medium (e.g. motor cooling)
  - low (e.g. for battery and cabin cooling)

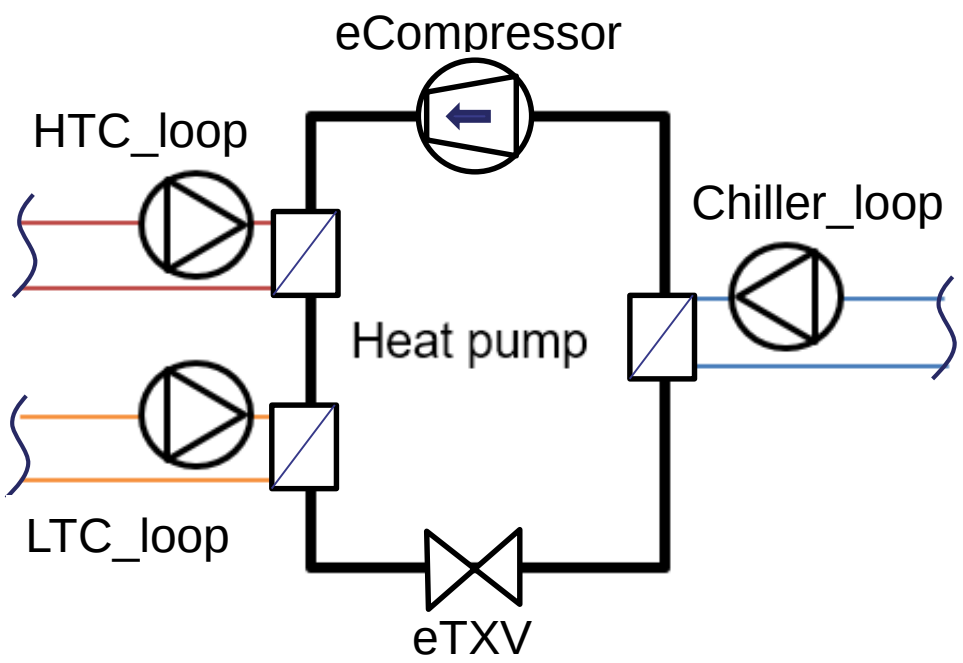

Copyright © Claytex Services Limited 2016

Heat Pump Integration

Integration into a BEV

- Vehicle subsystems and ambient can be connected to the heat pump system via the HTC, LTC, Chiller loop or isolated as required

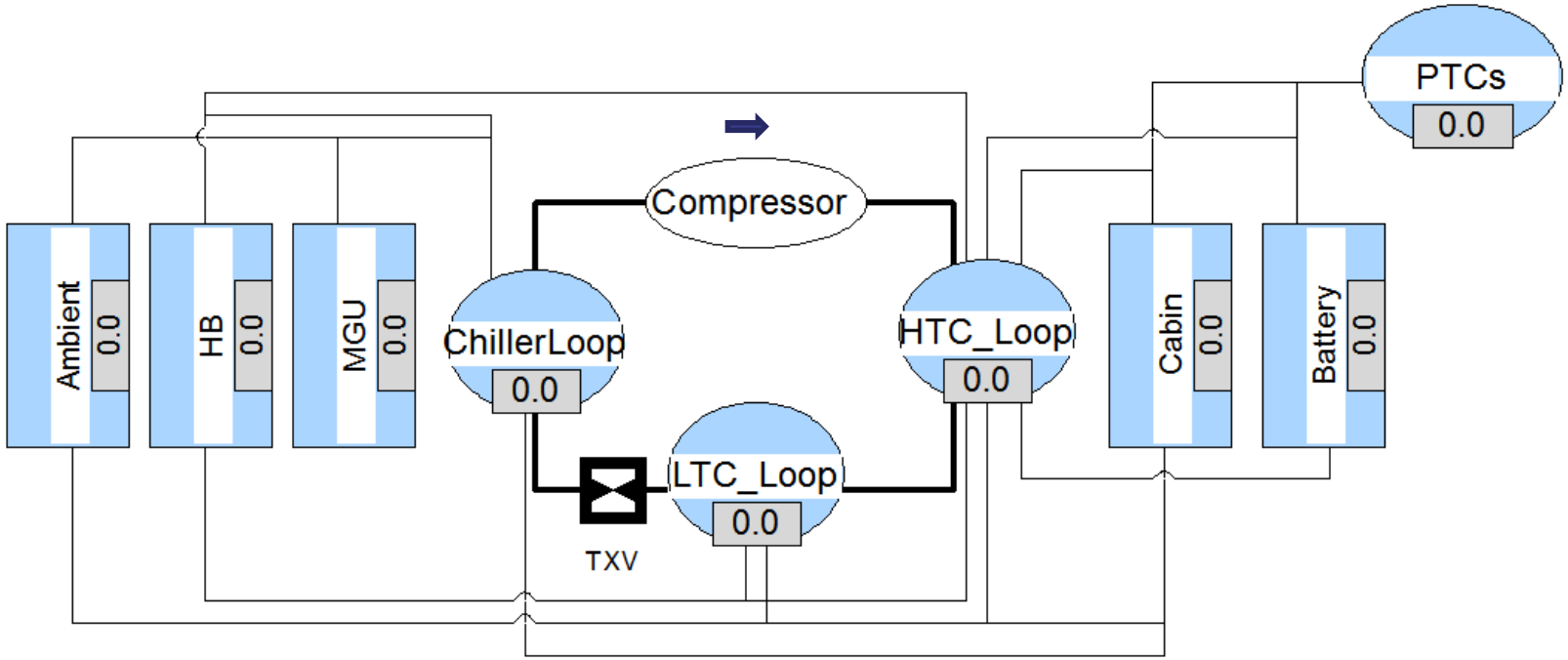

Copyright © Claytex Services Limited 2016

Vehicle model architecture

- Subsystem controllers
- Driver
- Drive cycle
- Battery
- Heat battery
- Cabin
- Chassis
- Powertrain
- Heat pump
- PTCs
- Atmospheric conditions

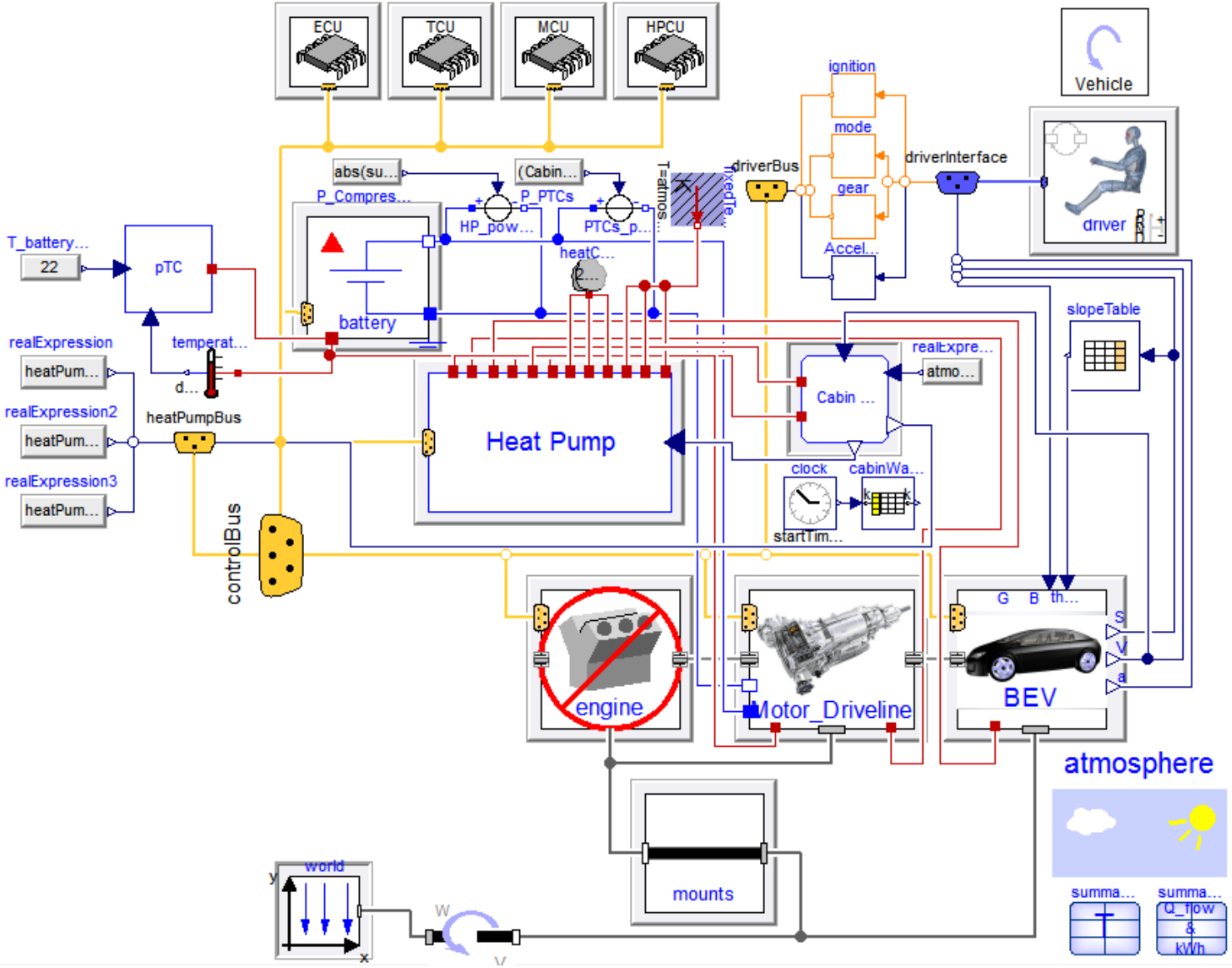

Copyright © Claytex Services Limited 2016

Idealised Heat Pump Model

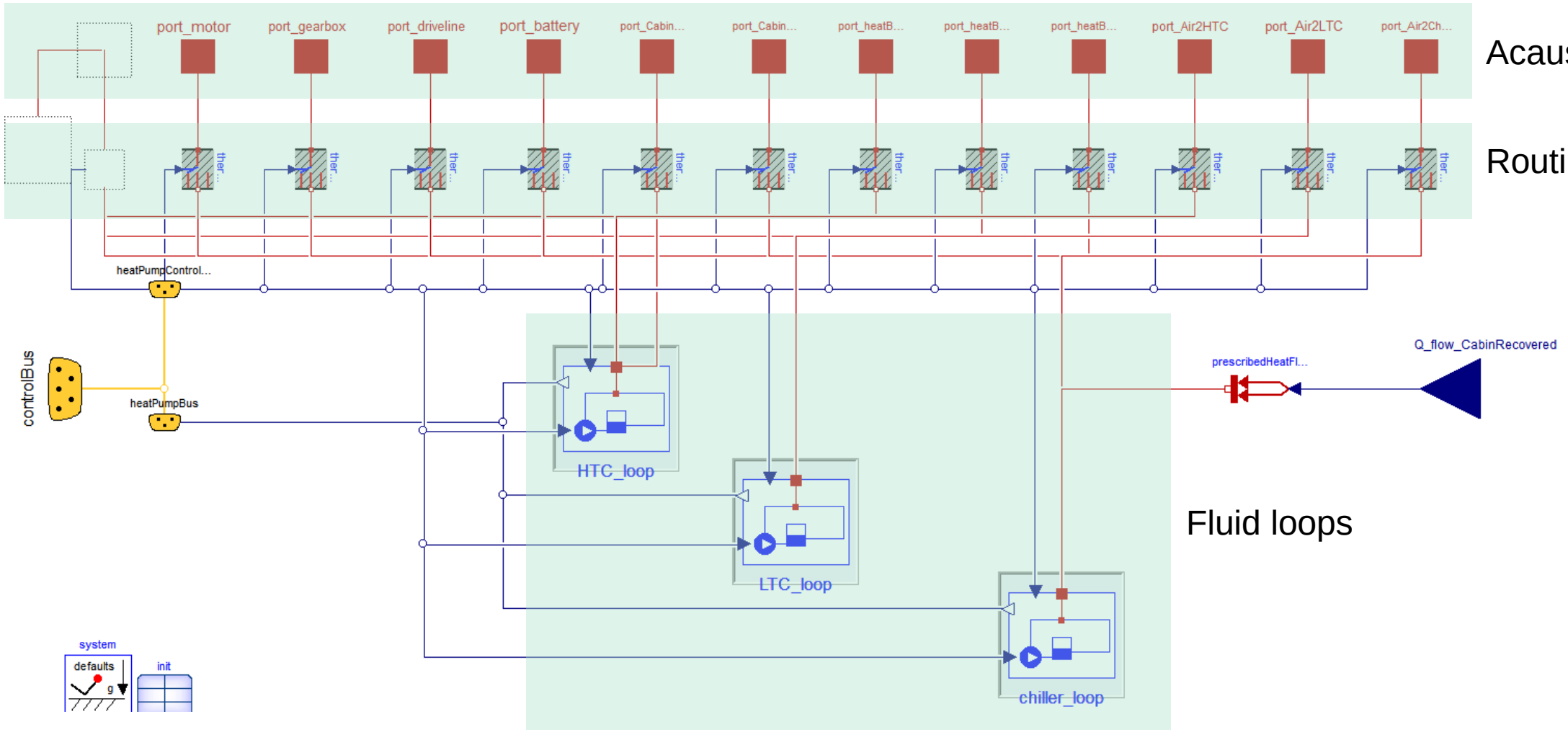

Copyright © Claytex Services Limited 2016

Experiment description

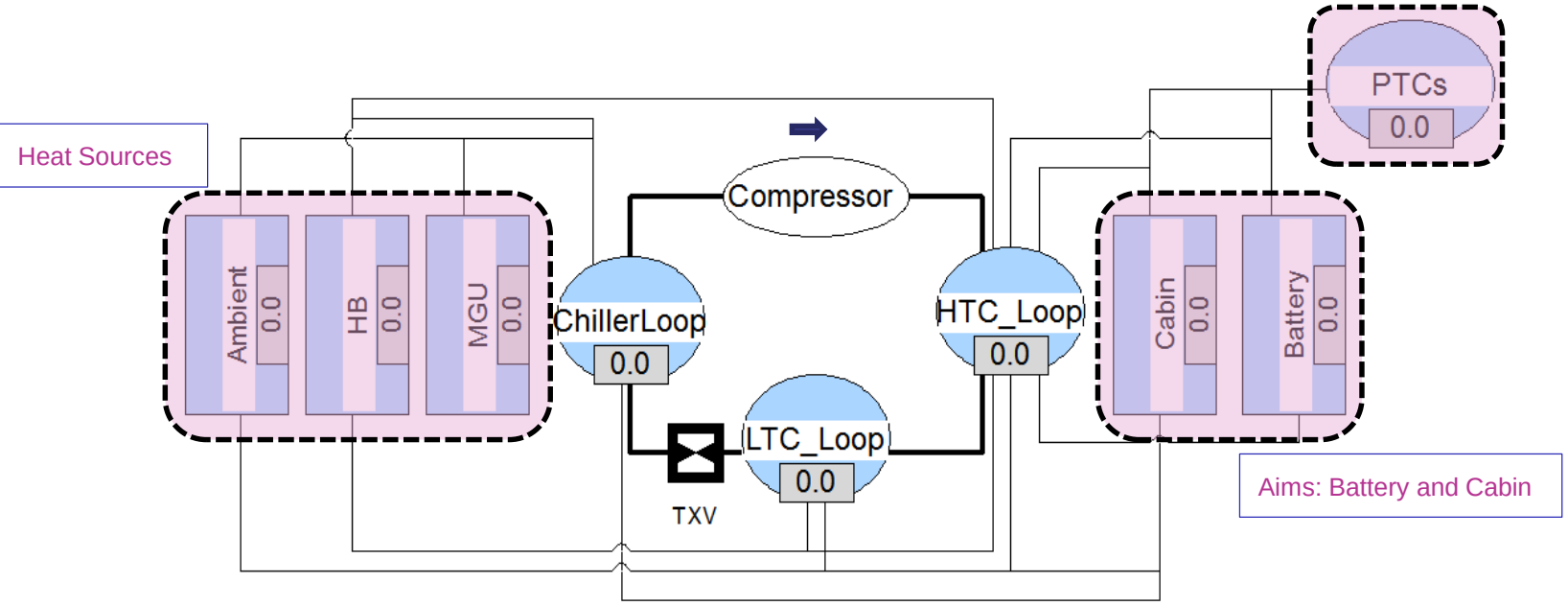

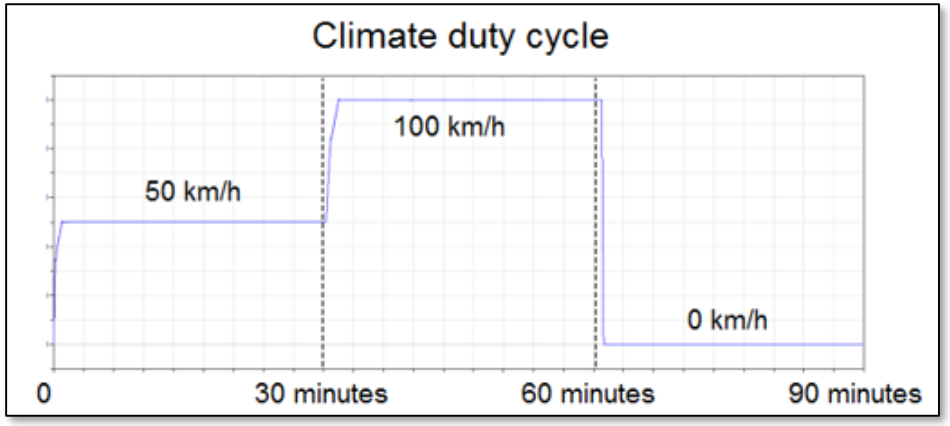

- Control the temperature of the **Cabin** and **Battery** using minimal electrical power to transfer and/or generate heat
- Heat sources:
  - PTCs
  - Powertrain source: MGU
  - Extra source: HB of 2MJ (can be pre-charged)
  - Ambient -5degC

Copyright © Claytex Services Limited 2016

Warm Up Scenarios

1. Baseline model, warming up components using PTCs only
   - Target warm up profile similar to conventional vehicle
2. HB (Heat Battery) pre-charged at 90degC, the HP (Heat Pump) is off. Warm-up directly via HTC using HB
3. HB pre-charged, connected firstly to the HTC loop then switched to the Chiller loop
4. HB pre-charged and connected directly to the Chiller loop
5. HB charged and connected to both HTC and Chiller loops
6. HB discharged (-5degC) and connected to the Chiller loop
7. HB disconnected from the HP, the new heat source is the MGU.
8. HB pre-charged and MGU connected to the Chiller loop.

*The PTCs are switched on when the temperature of the battery and cabin fall below their target

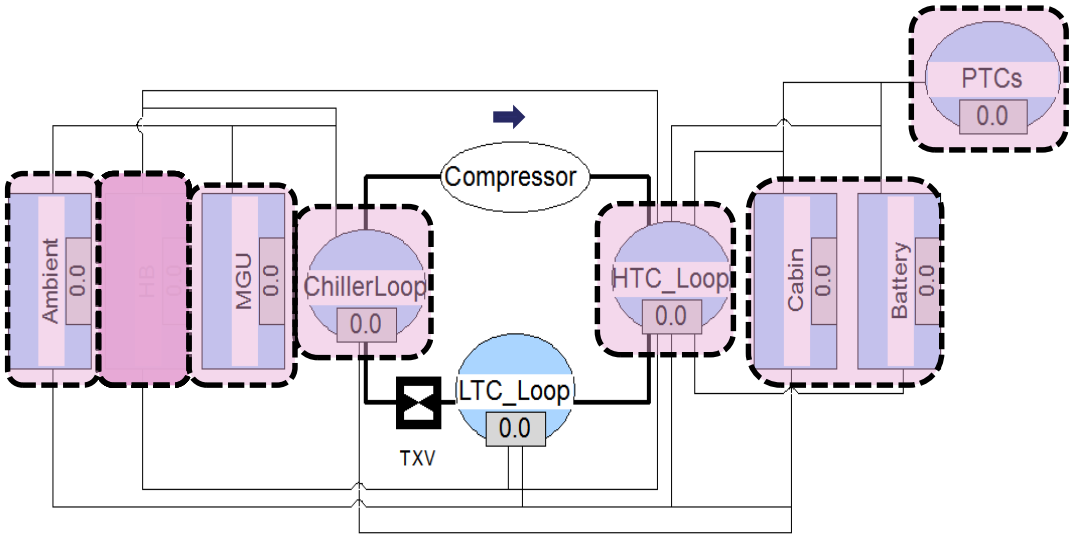

Copyright © Claytex Services Limited 2016

Consumptions comparison

	Battery Consumption (kWh)		
	30 minutes	60 minutes	90 minutes
1	8.42	21.96	23.27
	Energy consumption reduction from Baseline (%)		
2	-17.35%	-7.70%	-7.35%
3	-20.32%	-10.89%	-11.96%
4	-18.45%	-10.34%	-11.55%
5	-19.04%	-10.51%	-11.68%
6	-13.60%	-8.12%	-9.31%
7	-14.86%	-10.09%	-12.89%
8	-22.05%	-13.00%	-15.51%

1. Baseline model, warming up the components with PTCs.
2. HB charged to 90degC, the HP is off so all the components are connected to the HTC.
3. HB charged and connected firstly to the HTC loop and then switched to the Chiller loop.
4. HB charged and connected directly to the Chiller loop.
5. HB charged and connected to both HTC and Chiller loops.
6. HB discharged to -5degC and connected to the Chiller loop.
7. HB disconnected from the HP, the new heat source is the MGU.
8. HB charged to 90 degC connected to HTC loop, then switched to Chiller loop and MGU connected to the Chiller loop.

Copyright © Claytex Services Limited 2016

Moving and generating heat energy

	Energy used for moving and generating heat (kWh)		
	30 minutes	60 minutes	90 minutes
1	5.82	7.59	8.56
	Energy reduction from Baseline (%)		
2	-25.11%	-22.27%	-19.97%
3	-29.41%	-31.50%	-32.49%
4	-26.71%	-29.90%	-31.39%
5	-27.55%	-30.40%	-31.75%
6	-19.68%	-23.47%	-25.30%
7	-21.51%	-29.18%	-35.02%
8	-31.91%	-37.59%	-42.14%

1. Baseline model, warming up the components with PTCs.
2. HB charged to 90degC, the HP is off so all the components are connected to the HTC.
3. HB charged and connected firstly to the HTC loop and then switched to the Chiller loop.
4. HB charged and connected directly to the Chiller loop.
5. HB charged and connected to both HTC and Chiller loops.
6. HB discharged to -5degC and connected to the Chiller loop.
7. HB disconnected from the HP, the new heat source is the MGU.
8. HB charged to 90 degC connected to HTC loop, then switched to Chiller loop and MGU connected to the Chiller loop.

Figures include the energy consumed by the PTCs and by the HP.

Copyright © Claytex Services Limited 2016

Further studies carried out

- Increasing the power of the chiller from 10kW to 15kW
- Recirculation strategies
- Cabin exhaust waste heat recovery system to reduce the electrical consumption of PTCs

	Energy used for moving and generating heat (kWh)		
	30 minutes	60 minutes	90 minutes
Scenario 8: HB charged to 90 degC and connected to HTC loop, then switched to Chiller loop and MGU connected to the Chiller loop (Baseline)	3.96	4.74	4.96
	Energy reduction from Baseline (%)		
Increasing chiller power from 10 to 15 kW	-0.05%	-0.13%	-0.56%
Cabin 100% recirc	-9.15%	-9.39%	-8.93%
Cabin recirc from 100% to 60%	-6.65%	-7.06%	-7.48%
No recirc, cabin exhaust recovery system at 60%	-4.63%	-5.48%	-5.76%

Copyright © Claytex Services Limited 2016

Conclusions

- Rationalisation of several heat pump coupling scenarios
- Benefits on electrical energy consumption reduction investigated with an idealised acausal system model
  - Minimised limitations from current hardware specification
- Possibility of using other subsystems as thermal masses (e.g. MGU) to avoid/augment using a dedicated heat battery
- Maximisation of benefits using improved cabin air recirculation and exhaust energy recovery systems
- Selection of a scenario (#8) which could yield sufficient benefits to warrant further investigation / hardware design / implementation

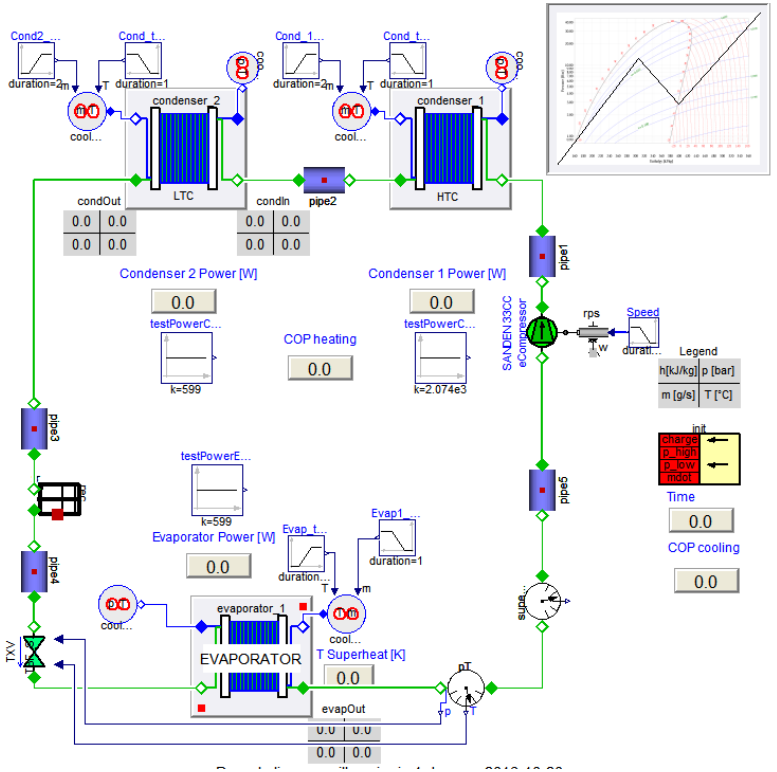

Copyright © Claytex Services Limited 2016

Further work

- HB recharging for use in the next drive cycle
- Investigate how more heat could be extracted from the MGU and other subsystems without detriments in performance

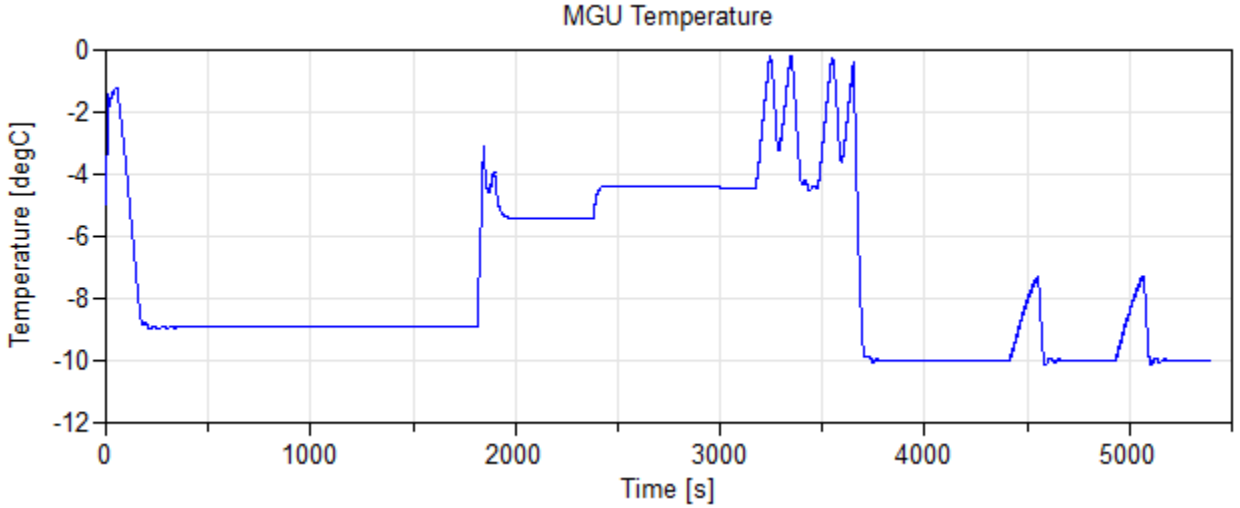

- Investigate the effect of using different sizes and technologies of HBs
- Optimization of recirculation strategy in relation to application of CO2 scrubbing technologies
- Integration of a physical heat pump model once hardware has been specified

Copyright © Claytex Services Limited 2016

Thank you for your attention

For more information visit our stand

Alessandro Picarelli
alessandro.picarelli@claytex.com
+44 1926 885900

Copyright © Claytex Services Limited 2016